Current part is item (28) on diagram. Available at www.oshkoshequipment.com

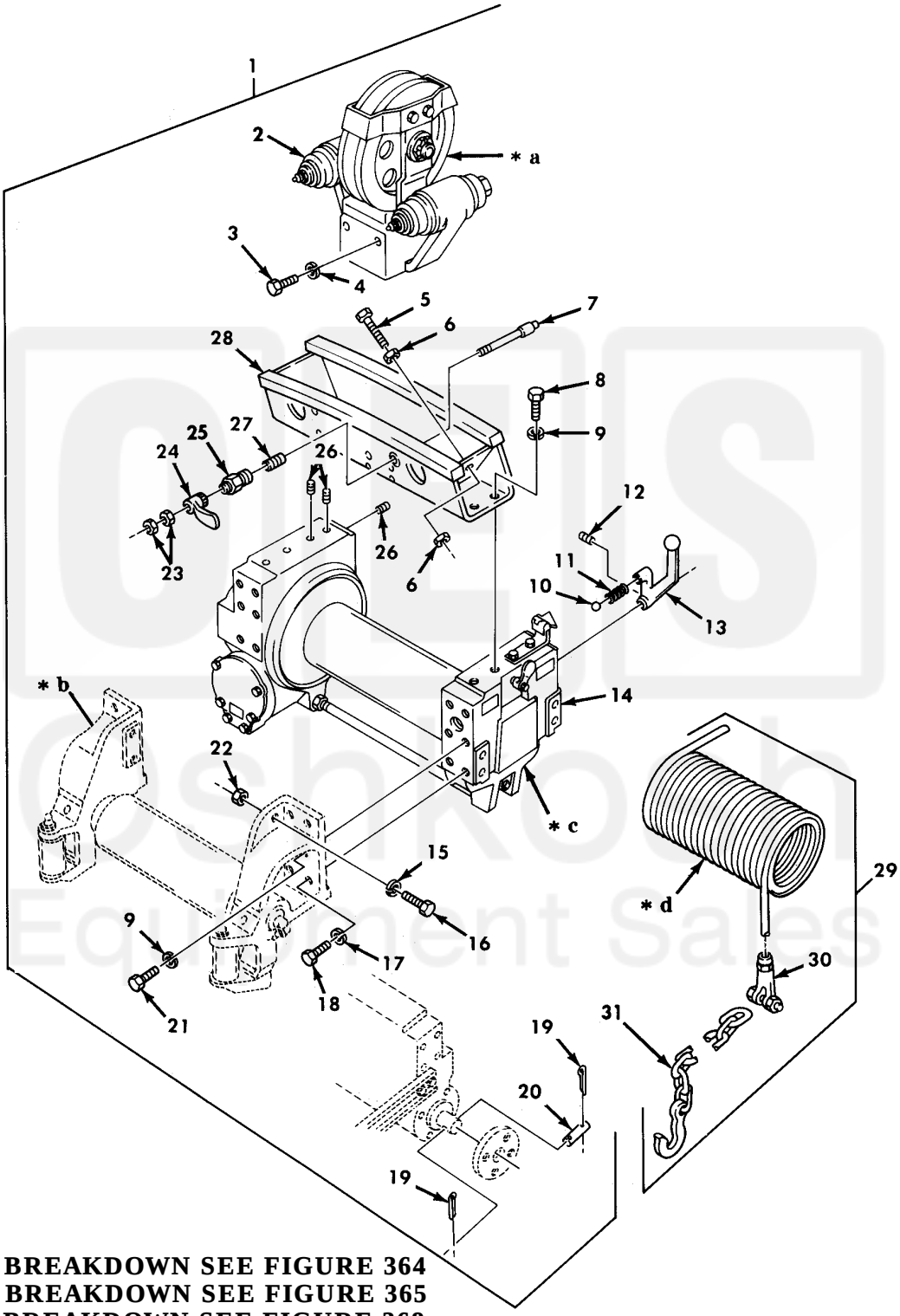

*** a FOR BREAKDOWN SEE FIGURE 364**
*** b FOR BREAKDOWN SEE FIGURE 365**
*** c FOR BREAKDOWN SEE FIGURE 368**
*** d PART OF ITEM 29**

Figure 362. Front Winch Assembly, Complete and Wire Rope Assembly, Wrecker.

Current part is item (28) on diagram. Available at www.oshkoshequipment.com

Current part is item (28) on diagram. Available at www.oshkoshequipment.com

(1) ITEM NO	(2) SMR CODE	(3) NSN	(4) CAGEC	(5) PART NUMBER	(6) DESCRIPTION AND USABLE ON CODE (UOC)	(7) QTY
					GROUP 2001 HOIST,CRANE,OR WINCH ASSEMBLY	
					FIG. 362 FRONT WINCH ASSEMBLY, COMPLETE AND WIRE ROPE ASSEMBLY, WRECKER	
1	PGOFH	2590-00-741-1122	19207	7411122	WINCH ASSEMBLY FRONT..... UOC:620,622	1
2	PAOFF	2590-00-121-0707	19207	7954483	.SHEAVE ASSEMBLY,SWI..... UOC:620,622	1
3	PAOZZ	5305-00-052-2218	96906	MS35265-107	.SCREW,MACHINE..... UOC:620,622	4
4	PAOZZ	5310-00-637-9541	96906	MS35338-46	.WASHER,LOCK..... UOC:620,622	4
5	PAOZZ	5305-00-054-9285	96906	MS51955-71	.SETSCREW..... UOC:620,622	2
6	PAFZZ	5310-00-834-8732	96906	MS35691-33	.NUT,PLAIN,HEXAGON..... UOC:620,622	4
7	PAOZZ	4820-00-652-5548	19207	8741768	.POPPET,LOCK,TROLLEY..... UOC:620,622	1
8	PAOZZ	5305-00-724-7219	80204	B1821BH063C125N	.SCREW,CAP,HEXAGON H..... UOC:620,622	4
9	PAOZZ	5310-00-820-6653	96906	MS35338-50	.WASHER,LOCK..... UOC:620,622	12
10	PAOZZ	3110-00-948-9796	96906	MS19061-20013	.BALL,BEARING..... UOC:620,622	1
11	PAOZZ	5360-00-740-9727	61465	304677	.SPRING,HELICAL,COMP..... UOC:620,622	1
12	PAOZZ	5305-00-724-6810	96906	MS51963-101	.SETSCREW..... UOC:620,622	1
13	PAOZZ	5340-00-351-7831	19207	7954471	.LEVER,MANUAL CONTRO..... UOC:620,622	1
14	PAOFH	2590-00-351-7865	19207	7954486	.WINCH,DRUM,VEHICLE..... UOC:620,622	1
15	PAOZZ	5310-00-584-5272	96906	MS35338-48	.WASHER,LOCK ROLLER AND TENSIONER ASSEMBLY..... UOC:620,622	4
16	PAOZZ	5305-00-719-5235	80204	B1821BH050F175N	.SCREW,CAP,HEXAGON H ROLLER AND TENSIONER ASSEMBLY..... UOC:620,622	4
17	PAOZZ	5310-00-584-7888	96906	MS35338-51	.WASHER,LOCK..... UOC:620,622	4
18	PAOZZ	5305-00-939-9204	96906	MS90725-187	.SCREW,CAP,HEXAGON H..... UOC:620,622	4
19	PAOZZ	5315-00-842-3044	96906	MS24665-283	.PIN,COTTER WINCH MOTOR ADAPTER ASSEMBLY..... UOC:620,622	2
20	PAOZZ	5315-00-209-7979	19207	7409348	.PIN,STRAIGHT,HEADLE..... UOC:620,622	1
21	PAOZZ	5305-00-724-7222	80204	B1821BH063C200N	.SCREW,CAP,HEXAGON H..... UOC:620,622	8
22	PAOZZ	5310-00-732-0560	96906	MS51968-14	.NUT,PLAIN,HEXAGON..... UOC:620,622	4
23	PAOZZ	5310-00-880-7744	96906	MS51967-5	.NUT,PLAIN,HEXAGON..... UOC:620,622	2
24	PAOZZ	2540-00-740-9150	19207	7409150	.LATCH,DRUM LOCK..... UOC:620,622	1
25	PAOZZ	2590-00-226-2347	19207	8344240	.NUT,WINCH POPPET..... UOC:620,622	1
26	PAOZZ	5305-00-724-7206	96906	MS51963-155	.SETSCREW..... UOC:620,622	10
27	PAOZZ	5360-00-753-8706	19207	7538706	.SPRING,HELICAL,COMP.....	1

Current part is item (28) on diagram. Available at www.oshkoshequipment.com

Current part is item (28) on diagram. Available at www.oshkoshequipment.com

(1) ITEM NO	(2) SMR CODE	(3) NSN	(4) CAGEC	(5) PART NUMBER	(6) DESCRIPTION AND USABLE ON CODE (UOC)	(7) QTY
					UOC:620,622	
28	PAOZZ	2590-01-082-2526	19207	8344234	.TRACK ASSEMBLY,TROL.....	1
					UOC:620,622	
29	AOOOO		19207	12253105-15	WIRE ROPE ASSEMBLY.....	1
					UOC:620,622	
30	PAOZZ	4030-00-158-2409	19207	7074517	.SOCKET,WIRE ROPE FRONT WINCH CABLE	1
					AND CHAIN ASSEMBLY.....	
					UOC:620,622	
31	PAOZZ	4010-01-027-0356	19207	12253104-4	.CHAIN ASSEMBLY,SING FRONT WINCH	1
					CABLE.....	
					UOC:620,622	

END OF FIGURE

Current part is item (28) on diagram. Available at www.oshkoshequipment.com